astra telematics

AT402BLE Vehicle Tracking Device

User Guide

Version: 1.4

Date: July 2022

Abbreviations

ADC	Analogue to Digital Converter
ASCII	American Standard Code for Information Interchange (computer character set)
BLE	Bluetooth Low Energy
BT	Bluetooth (Classic)
CAN	Controller Area Network
DC	Direct Current
FET	Field Effect Transistor
GIS	Geographic Information System
GPRS	General Packet Radio Service (part of GSM)
GPS	Global Positioning System
GNSS	Global Navigation Satellite System
GSM	Global System for Mobile communication
IP	Internet Protocol (part of TCP/IP)
LED	Light Emitting Diode
MEMS	Micro Electro-Mechanical System
NMEA	National Marine Electronics Association (defined a GPS output format)
OTA	Over the Air (remote configuration of devices)
PC	Personal Computer
PCB	Printed Circuit Board
PDU	Protocol Description Unit (describes a binary SMS format)
RFID	Radio Frequency Identification
SIM	Subscriber Identity Module
SMS	Short Message Service
SMSC	Short Message Service Centre
SV	Satellite Vehicle
TCP	Transmission Control Protocol (part of TCP/IP)
UDP	User Datagram Protocol
UMTS	Universal Mobile Telecommunication Service
WGS84	World Geodetic System 1984 (global co-ordinate system used by GPS)

Product Overview

The AT402 and AT402BLE are highly featured vehicle tracking devices, housed in a sturdy plastic enclosure with internal GNSS/GSM/LTE antennas, and sealed to IP65 specifications. Part numbering is as follows:

AT402	IoT Device without BLE option
AT402BLE	IoT device with the BLE option fitted

Note that the BLE option is factory fitted during manufacture and cannot be retro-fitted. This document will refer to simply "AT402" for brevity, but is relevant to both devices in all but the BLE feature.

The AT402 incorporates the very latest technology, including the latest L-series low-power Cortex M4 ARM processor, Quectel BG600L-M3 global-band GSM/LTE/NBIoT communication module and Quectel LC86L GNSS, supporting GPS, GLONASS & BeiDou navigation systems. The AT402 operates from an external voltage source in the range 6 to 60V, and has an internal 450mAh back-up battery, allowing operation for approx. 5 hours in continuous mode. Interconnections are made with a single 12-way connector, which provides IP67 sealing when mated (note however, that the enclosure is rated to IP65 only).

Features

The main features of the AT402 are highlighted below:

- Compact size
- IP65 sealing
- Cortex M4 ARM Processor
- Quectel LC86L GNSS supporting GPS, GLONASS and BeiDou navigation systems
- Quectel BG600L-M3 GSM / LTE Cat-M / NBIoT communications module
- Internal GSM / LTE antenna
- Internal GNSS antenna, 15mm ceramic patch
- Low power consumption (near zero current drain when vehicle ignition is off)
- 3 axis accelerometer (2/8g)
- CANBus interface with FMS and OBD support
- 2 digital inputs
- 2 digital outputs
- iButton / 1-wire
- 1 RS232 Port
- BLE 4.2 (option)
- 3FF microSIM or MFF2 UICC chip SIM (factory option)
- Internal back-up battery, lithium-polymer, 510mAh
- Configuration by RS232, SMS or TCP/UDP
- Fast and reliable over the air firmware update (FOTA)
- Driver ID using external RFID/NFC card reader option
- Modular communication protocol X
- Pass through data mode
- SDK available for rapid development of client customised applications

astra telematics

Technical Specifications

GSM-EGPRS / LTE Cat M1 / Cat NB2 Communication

Communications Module:	Quectel BG600L-M3
GSM EGPRS Frequency Bands:	850/900/1800/1900 MHz
LTE Cat M1 Frequency Bands:	B1/B2/B3/B4/B5/B8/B12/B13/B14/B18/B19/B20/B25/B26/B27/B28/B66/B85
Cat NB2 Frequency Bands:	LTE-FDD: B1/B2/B3/B4/B5/B8/B12/B13/B18/B19/B20/B25/B26/B28/B66/B71/B85
GSM Antenna:	Internal PIFA PCB trace
Data Transfer Modes:	TCP or UDP

GNSS Location

GNSS Antenna:	Internal 15 x 15 x 4mm ceramic patch
GNSS Receiver:	Quectel LC86L
L1/B1 Receiver:	GPS L1 C/A: 1574.397–1576.443 MHz
	GLONASS L1: 1597.781–1605.656 MHz
	BeiDou B1 C/A: 1559.052–1563.144 MHz
Position Accuracy:	< 2.5m CEP @ -130dBm
Receiver Sensitivity:	-166dBm (GPS + GLONASS, tracking & navigation)
TTFF: Cold start	< 15 sec (average) @ -130 dBm
Hot start	< 2 s (average) @ -130 dBm

BLE

BLE Module:	Silabs BGM123
BLE Version:	4.2
Antenna:	Internal

Power

External Voltage Source:	6 – 60 VDC
Internal Battery:	3.7V, 450mAh
Battery Life:	5 hours continuous operation
	12 days operation in low-power mode @ 1 hour reporting
	30 days operation in low-power mode @ 1 day reporting
Current Consumption, max:	300mA @ 13.8 VDC (battery charging at max. rate)
Current consumption, average:	25mA @ 13.8 VDC (typical)
Current consumption, sleep:	< 100uA

Features

Configuration:	Astra Generic Configuration commands over SMS / TCP / RS232
Firmware update:	Supports Firmware Update Over-The-Air (FOTA)
Memory:	Total 1024k on-board non-volatile flash memory
Report storage:	6000 reports
Communication Protocol:	Astra Telematics Modular Protocol X via TCP / UDP sockets

Interconnections

2 digital pull-up inputs
2 digital outputs, 60V, 0.5A maximum, open drain (optional 3.3V drive)
1-wire (dallas)
CANBus / FMS 2.0 / OBD2
1 RS232 serial port (TTL levels option)

SIM:	Micro SIM 3FF Format, push-push style
POWER & DATA:	Molex MX120G 12-pin

astra telematics

Hardware Description

Overall Dimensions

103 x 80 x 39 mm

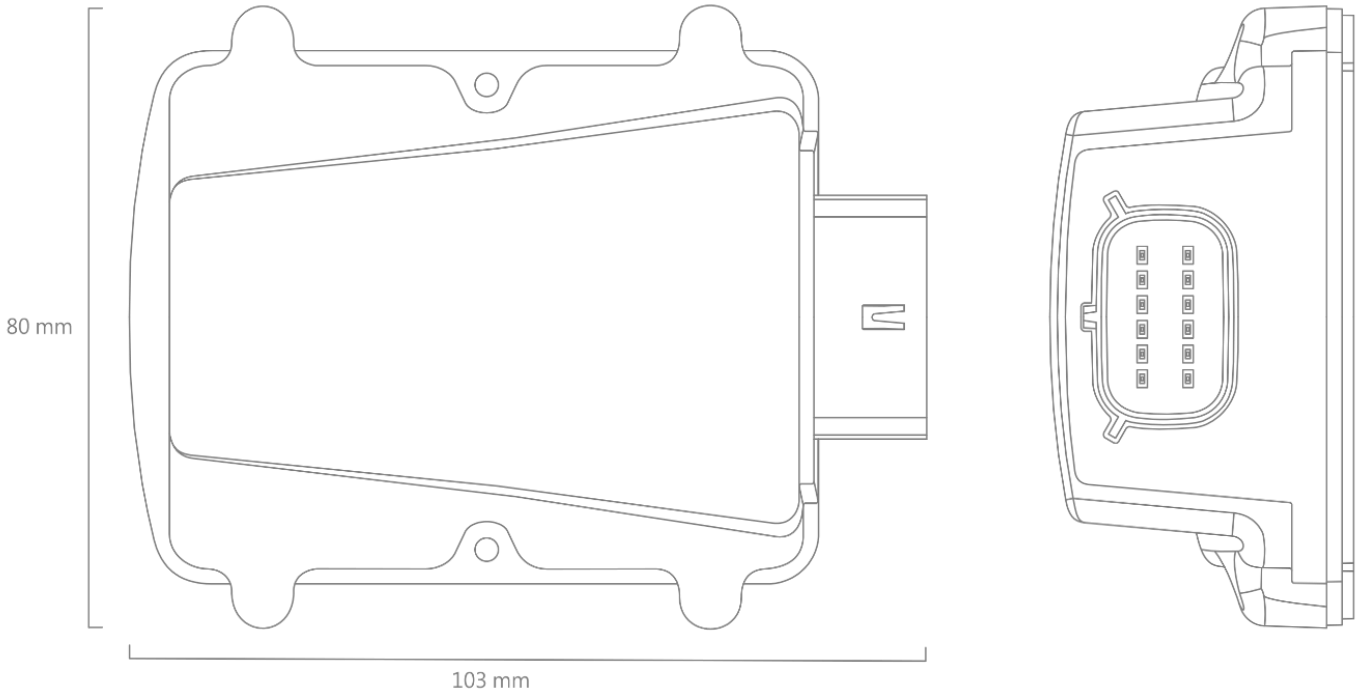

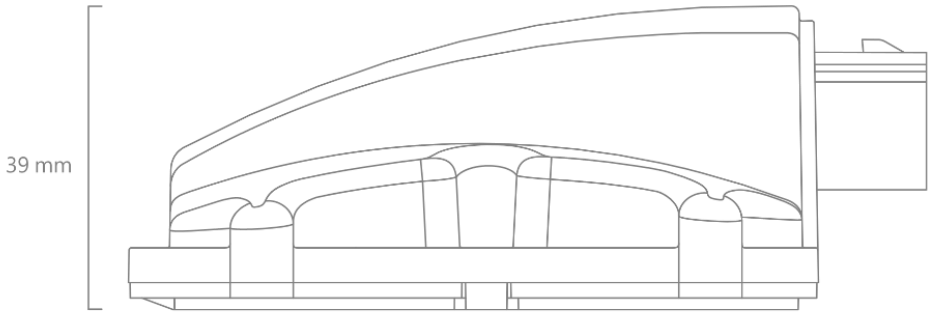

[ACTUAL SIZE]

SIM installation

The AT402 requires a micro SIM, format 3FF. Insert the SIM with the
oriented as per the picture below. Note that the device will power-up when the SIM is inserted.

INSERT SIM

Power Requirements

The AT402 operates from a DC Voltage between 5 and 60 Volts. We recommend that a permanent power source is used to supply the AT402. If current drain is of concern, please refer to the Generic Command Reference Guide for options to minimise vehicle battery drain when stationary for long periods.

Back-up Battery

The AT402 operates from the external voltage source, with an internal back-up battery to allow continuous operation for short periods without external power. The device will maintain the battery charge level and seamlessly switch to battery power if the external voltage source fails or fall outside of the permitted range. Please note the handling precautions for lithium polymer batteries as outlined in the AT402 Installation Guide.

Fuse Recommendations

Typical current drain is 25mA @ 13.8VDC, although maximum peak current can be around 0.3A for short periods. We recommend the use of 1A fuses in the power feeds and ignition sense wires.

Internal Status LEDs

The AT402 has 2 internal status LEDs, which indicate GPS/GNSS status and GSM/UMTS network status, as per the description below:

GNSS Status (green)	Constant ON	Searching for initial fix
	Double Flash @ 1Hz	GPS 3D navigation
	Slow Flash @ 0.2Hz	Lost GPS navigation
	Fast Flash (>2Hz)	Test mode – contact astra
COMM Status (blue):	200 ms ON / 1800 ms OFF	ON / SEARCHING
	1800 ms ON / 200 ms OFF	registered on network
	Constant OFF	Modem OFF

GSM NETWORK STATUS LED

GPS /GNSS STATUS LED

Interconnections

All connections to the AT402 are provided by a single 12-way cable assembly.

AT402 Pin Applications and Colour Code

Pin	Function	Wire colour
1	VIN 5 - 60 VDC	RED
2	DIGITAL OUTPUT 1	YELLOW
3	DIGITAL OUTPUT 2	PINK
4	DIGITAL INPUT 1	WHITE
5	DIGITAL INPUT 2	BROWN
6	VDD-DIG	ORANGE
7	GND	BLACK
8	CANL	CYAN
9	CANH	PURPLE
10	RS232-TXD	GREEN
11	RS232-RXD	BLUE
12	1-WIRE	GREY

Digital Inputs

Digital inputs 1 and 2 are normally low inputs and can be connected directly to 12/24V vehicle circuits.

Digital Outputs

The AT402 is capable of switching 2 different loads using digital outputs 1 and 2, implemented with MOSFET low-side switches. These must be used to switch the GND side of the load.

Digital outputs are capable of handling loads of up to 60V, 0.5A maximum. The digital output switches are protected by internal fuses, rated at 0.63A. The fuses are not user-replaceable, and are not covered by warranty, hence any replacements are chargeable. An external fuse, rated at 0.5A will avoid internal damage to the AT402 device.

Integrated Accelerometer

The AT402A has a built in 3 axis MEMS accelerometer that operates in the range ±2g and is used to measure driver behaviour (acceleration and braking) during normal driving conditions.

The accelerometer also allows the AT402 to wake from sleep on movement, with configurable thresholds. Please refer to the MEMS parameter and Power Management section for more details.

1-wire / iButton / Temperature Probe Interface

This can be used with iButton devices for the purpose of driver ID, or with DS18B20 temperature probes. Please refer to the appropriate application notes for more details of how to use these features.

CANBus

The AT402 has integrated CANBus. Please refer to CANBus and FMS Application Notes for details of supported protocols and features.

> **IMPORTANT NOTE:** The CANBus pins are ESD protected to 15kV, but can only withstand a continuous voltage of 12V maximum. These pins must not be used for any other application to avoid damage to the device.

3.3V Auxilliary Output

This is reserved for use with external accessories. These outputs are fused at 150mA, maximum recommended current drain is 100mA.

Device Configuration / Settings

For device configuration options and related commands, please refer to the Astra Telematics Command Reference document, which describes our generic commands, which can be used with all our devices.

Questions?

If you have any problems, questions or if you suspect a product failure / malfunction, please contact Astra Telematics technical support:

support@astratelematics.com
+44 161 826 8800

astra telematics

Electrical Parameters

Operating Conditions

Parameter	Min	Max	Units
Power Supply Input Voltage	+5	+60	V
Digital Input High Voltage Threshold	+5.0	-	V
Digital Input Low Voltage Threshold	-	+2.0	V
Digital Maximum Voltage	-	+30.0	V
Digital Maximum Current	-	250	uA

Absolute Maximum Ratings

Parameter	Min	Max	Units
Power Supply Input Voltage	-32	+63	V
Voltage on Digital Inputs	-32	+32	V
Voltage on RS232 RX	-25	+25	V
Voltage on RS232 TX	-13	+13	V
Voltage on CAN RX/TX	-12	+12	V
Voltage on iButton/Dallas Interface	-5	+5	V
Current sunk by MOSFET low side switches		500	mA
Current capacity of 3.3V and 5.0V outputs		100	mA
Voltage rating of relay and MOSFET switches	-	+60.0	V
Storage Temperature	-40	+85	°C
Operating Temperature (without battery)	-20	+60	°C
Operating Temperature (with battery)	0	45	°C

Typical Power Consumption

Operating Mode	*Current @ 13.8V*	Current @ 27.6V	Power Consumption
Fully Operational	45mA	24mA	< 400mW
Battery charging	500mA	275mA	< 7W
Sleep (no battery)	4mA	3mA	7mW
Sleep (with battery)	< 1mA	< 1mA	0.1mW

Environmental Specifications

Parameter	Specification
Storage temperature	-40 to +85 °C
Operating temperature (no battery)	-20 to +60 °C
Operating temperature (with battery)	0 to +45 °C (note: no charging below 0°C)
Ingress Protection	IP65
Vibration, broadband random	Complies with IEC60068-2-64
Shock	Complies with IEC60068-2-64
Humidity	Complies with IEC60068-2-64

AT402-STD (Standard) Kit Contents

CB403 Plug-and-Play Cable
The 12-way AT403 cable is terminated to our optional accessories. Note that each accessory is fitted with a unique connector, which matches only one of the available CB403 connectors, hence preventing incorrect termination. The following optional accessories are available from Astra Telematics and supported by direct connection to the CB403 cable:

- IB001 iButton driver ID probe
- CB242 OBD cable
- CB002 FMS cable
- CC001 contactless CANBus adapter
- BZ001 buzzer
- CR001 RFID/NFC card reader
- CR002 MIFARE card reader
- TP001 1-wire temperature sensor
- CB004 RS232 DB9 debug adapter

For installation information, please refer to our AT402 Installation Guide

AT402-FMS (FMS) Kit Contents

Our AT402 FMS kit is supplied with a CB001 power / ignition cable, a CB403 plug-and-play cable and a CC001 contactless CAN adapter ('CAN-click').

CC001 CAN-click contactless CANBus adapter

Allows read-only connection to CANBus networks without direct connection to existing vehicle cables. For use in FMS applications. Terminated for use with our CB403 plug and play cable.

CB403 Plug-and-Play Cable

The 12-way AT403 cable is terminated to our optional accessories.

astra telematics

AT402-OBD Kit Contents

Our AT402 OBD kit is supplied with a CB242 OBD cable and a CB403 plug-and-play cable for easy connection of accessories.

CB242 OBD Cable

Allows easy hook-up of power and CANBus connections directly from the vehicle OBD2 socket. Terminated with a 2 x 2- way connectors (one for device power and one for CANBus signals) to suit the CB403 cable:

CB403 Plug-and-Play Cable

For installation information, please refer to our AT402 Installation Guide